H-BR TT 10

HORIZONTAL BRACKET

Description

Standard compliance	Safety agency	CE compliant
Size	Weight	2 kg / 4.41 lbs
Physical specifications	Color	Black

Line Art 2D

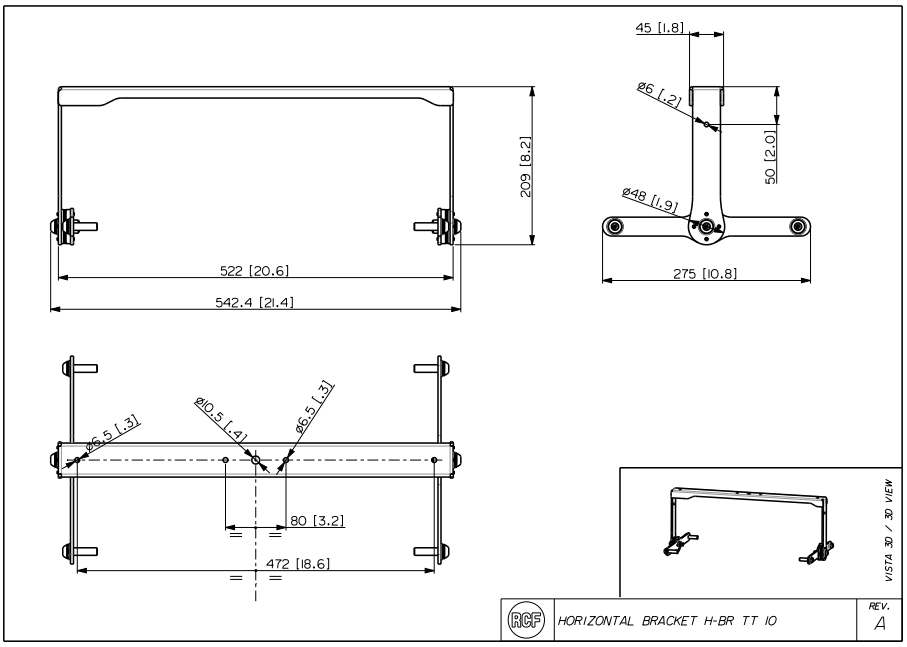

Part Number 13360402 H-BR TT 10 Black EAN 8024530016319

Technical Specifications Products are continually improved. All specifications are therefore subject to change without notice.